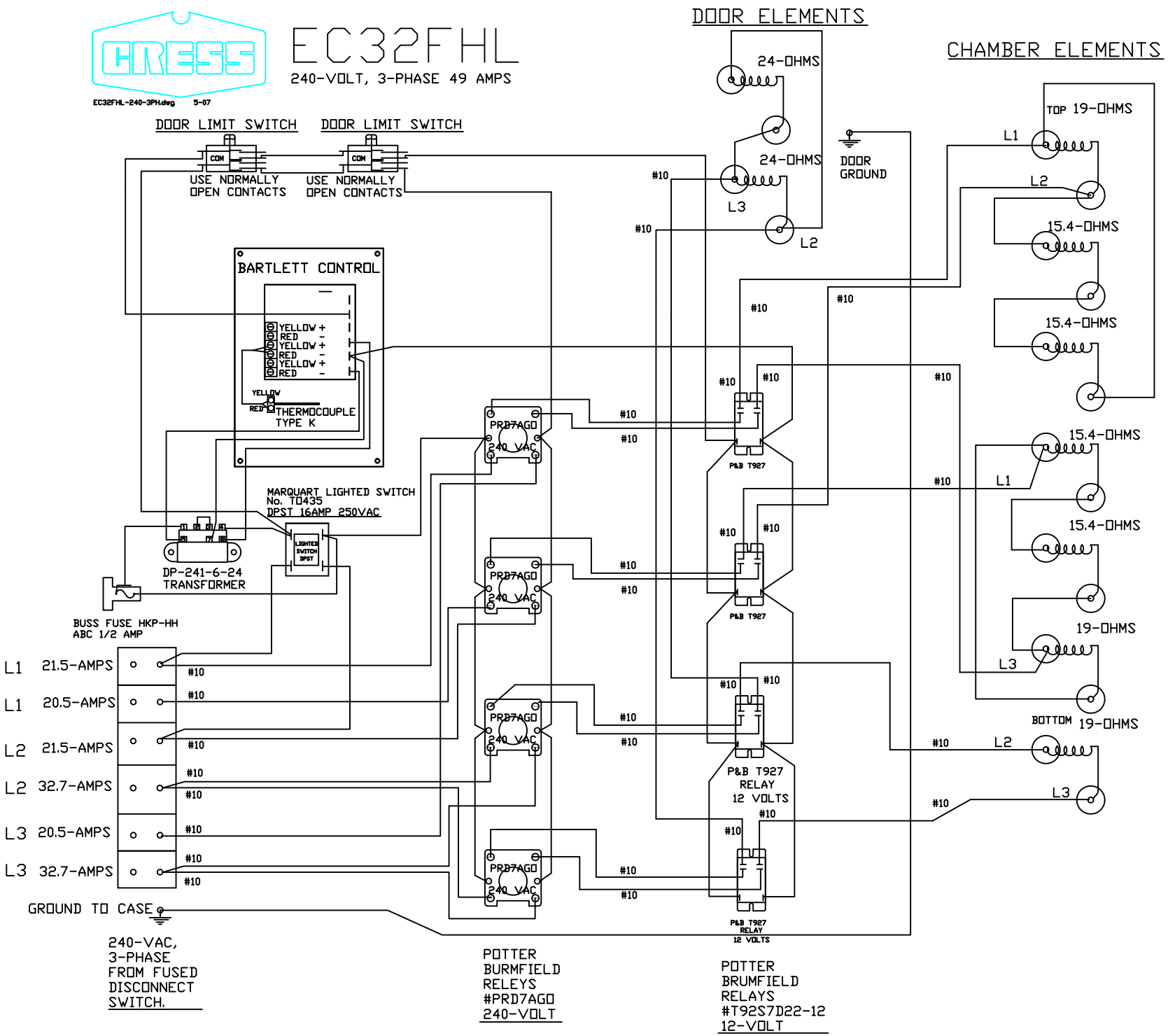
CRESS
EC32FHL
240-VOLT, 3-PHASE 49 AMPS
EC32FHL-240-3PH.dwg 5-07
DOOR ELEMENTS
24-OHMS
24-OHMS
L3
L2
DOOR GROUND
CHAMBER ELEMENTS
TOP 19-OHMS
L1
L2
15.4-OHMS
15.4-OHMS
15.4-OHMS
L1
15.4-OHMS
19-OHMS
L3
BOTTOM 19-OHMS
L2
L3
DOOR LIMIT SWITCH
DOOR LIMIT SWITCH
COM
COM
USE NORMALLY OPEN CONTACTS
USE NORMALLY OPEN CONTACTS
BARTLETT CONTROL
YELLOW +
RED -
YELLOW +
RED -
YELLOW +
RED -
YELLOW
RED
THERMOCOUPLE TYPE K
MARQUART LIGHTED SWITCH
No. T0435
DPST 16AMP 250VAC
LIGHTED SWITCH DPST
DP-241-6-24 TRANSFORMER
BUSS FUSE HKP-HH ABC 1/2 AMP
L1 21.5-AMPS
L1 20.5-AMPS
L2 21.5-AMPS
L2 32.7-AMPS
L3 20.5-AMPS
L3 32.7-AMPS
GROUND TO CASE
#10
PRD7AGO
240 VAC
P&B T927
P&B T927 RELAY 12 VOLTS
240-VAC, 3-PHASE FROM FUSED DISCONNECT SWITCH.
POTTER BURMFIELD RELEYS #PRD7AGO 240-VOLT
POTTER BRUMFIELD RELAYS #T92S7D22-12 12-VOLT